Innovation since 1935

PRODUCT TECHNICAL SHEET

Collection :	JOE	Ref. :	**4586.--.74**

Set thermostatique de douche mural, douchette et colonne avec tête de douche

Set douchethermostaat voor wandmontage, handdouche en douchezuil met hoofddouche

Set wall-mounted shower thermostatic with handshower, support, shower arm with diverter and rainshower head

Picture

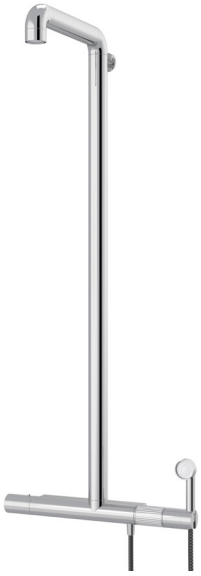

Product details

Internal mechanism : Ceramic valve 1/4 turn - two outlets

T° mechanism : Thermostatic wax cartridge

Technical drawing

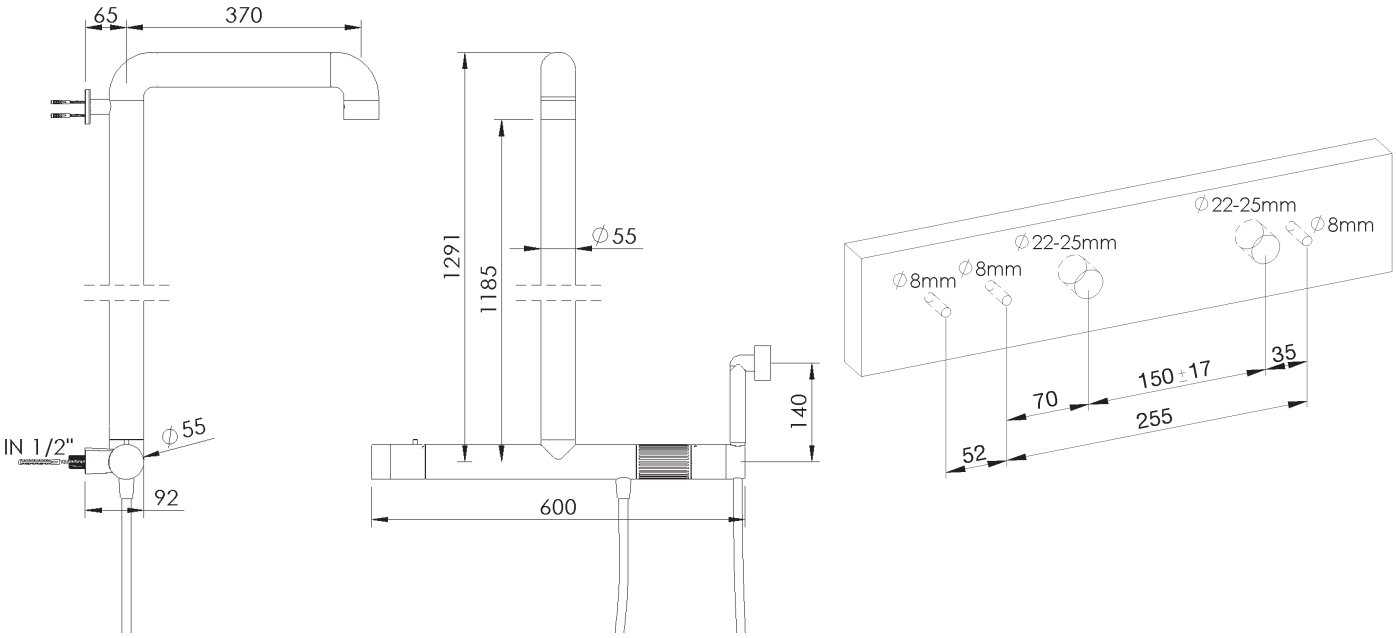

RA1.V01

rvb sa/nv Boulevard Industriel 137 Industrielaan B-1070 Brussels Belgium Tel: +32 2 376 00 30 info@rvb.be www.rvb.be